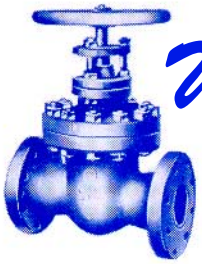

Weyn - Lauwers N.V.
Industriepark-Noord 12
B - 9100 SINT-NIKLAAS
Tel. : 00 32 (0)3 776.34.13
Fax : 00 32 (0)3 778.09.52
weynlauwers@weynlauwers.be
www.weynlauwers.be

BRASS BALL VALVE FULL BORE - FF FIG 91

DESIGN FEATURES

- brass ball valve full bore
- max. temp : +180'C
- specifications :
  - brass according DIN 17660
  - thread ends gas female-female acc. ISO 228/1
  - steel lever for manual control
  - **PN 40**

- also available with NPT thread ends (fig 91NPT)

MATERIALS

item	Part name	Material
1	body	brass
2	cap	brass
3	ball	brass
4	stem	brass
5	ball seats	PTFE
6	stem packing	PTFE
7	O-ring	NBR
8	stem ring	brass
9	nut	brass
10	handle	steel

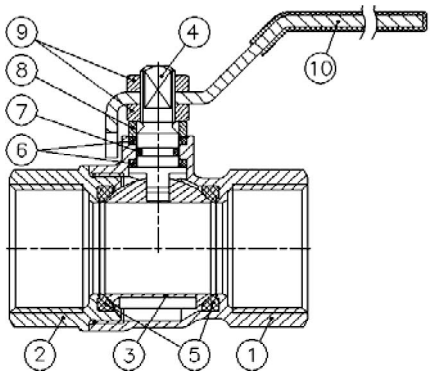

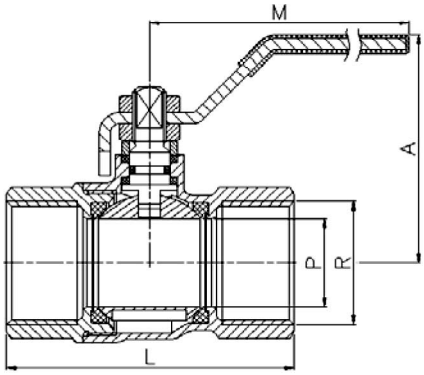

SIZE (in mm)

DN	1/4"	3/8"	1/2"	3/4"	1"	1 1/4"	1 1/2"	2"			
PN	40	40	40	40	40	40	40	40			
P	10	10	15	20	25	32	40	50			
A	45	45	47	58	61	74	80	91			
L	48	50	58	65	78	88	105	122			
M	84	84	84	98	98	126	126	158			
kg	0,35	0,35	0,18	0,295	0,450	0,715	1,075	1,645			
ref.	207232	207233	207234	207235	207236	207237	207238	207239			