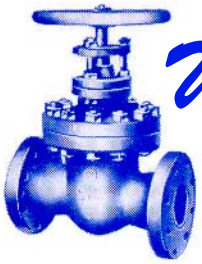

Weyn - Lauwers N.V.
Industriepark-Noord 12
B - 9100 SINT-NIKLAAS
Tel. : 00 32 (0)3 776.34.13
Fax : 00 32 (0)3 778.09.52
weynlauwers@weynlauwers.be
www.weynlauwers.be

BRASS BALL VALVE FULL BORE - FF FIG 93

DESIGN FEATURES

- brass ball valve full bore
- max. temp : +180'C
- specifications :
  - brass according DIN 17660
  - thread ends gas female-female acc. ISO 228/1
  - steel lever for manual control
  - PN 25

- also available with NPT thread ends (fig 93NPT)

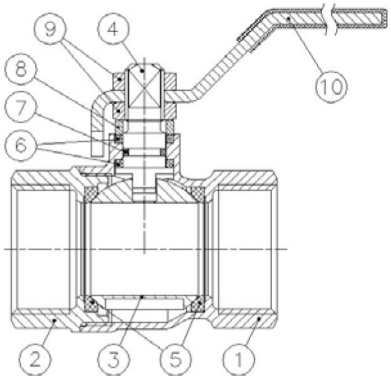

MATERIALS

item	Part name	Material
1	body	brass
2	cap	brass
3	ball	brass
4	stem	brass
5	ball seats	PTFE
6	stem packing	PTFE
7	O-ring	NBR
8	stem ring	brass
9	nut	brass
10	handle	steel

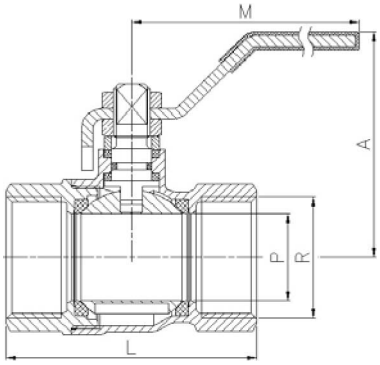

SIZE (in mm)

DN	1/4"	3/8"	1/2"	3/4"	1"	1 1/4"	1 1/2"	2"	2 1/2"	3"	4"
PN	25	25	25	25	25	25	25	25	25	25	25
P	10	10	15	20	25	32	40	50	60	74	92
A	46	46	47	58	61	74	80	91	101	131	145
L	40	43	49	45	68	80	89	104	137	158	183
M	84	84	84	98	98	126	126	158	158	196	265
kg	0,11	0,115	0,155	0,265	0,395	0,620	0,865	1,365	2,49	4,125	6,31
ref.	93.02	205245	205246	205247	205248	205249	205250	205251	205252	205253	205254