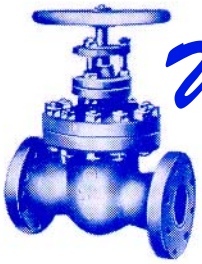

Weyn - Lauwers N.V.
Industriepark-Noord 12
B - 9100 SINT-NIKLAAS
Tel. : 00 32 (0)3 776.34.13
Fax : 00 32 (0)3 778.09.52
weynlauwers@weynlauwers.be
www.weynlauwers.be

BRASS BALL VALVE BUTTERFLY HANDLE FF - FIG 95

DESIGN FEATURES

- brass ball valve
- temp : -20'C +90'C
- specifications :
  - brass according UNE-EN 12165
  - thread ends gas female-female acc. ISO 228/1
  - aluminium butterfly handle for manual control
  - PN 25

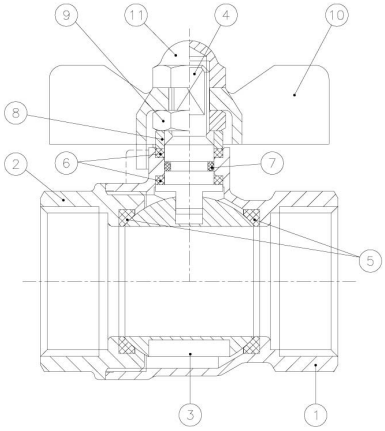

MATERIALS

item	Part name	Material
1	body	brass (CW617N)
2	cap	brass (CW617N)
3	ball	brass (CW617N)
4	stem	brass (CW617N)
5	ball seats	PTFE
6	stem packing	PTFE
7	O-ring	NBR
8	stem ring	brass
9	nut	brass
10	T-handle	aluminium
11	nut	brass

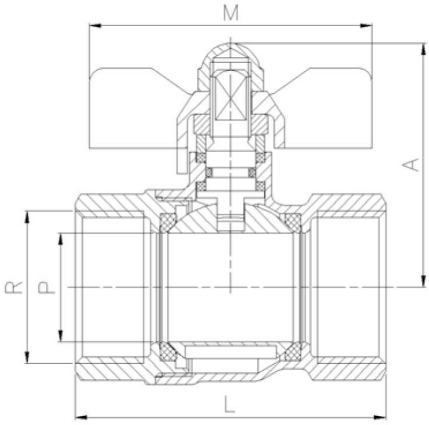

SIZE (in mm)

DN	1/4"	3/8"	1/2"	3/4"	1"						
DN	8	10	15	20	25						
P	10	10	14	19	24						
A	38	38	40	50	53						
L	40	43	49	56	68						
M	50	50	50	62	62						
kg	0,09	0,10	0,145	0,240	0,360						
ref.	205244	95.03	95.04	205247-1	95.06						