Weyn-Lauwers N.V.
Industriepark-Noord 12
B - 9100 SINT-NIKLAAS
Tel. : 00 32 (0)3 776.34.13
Fax : 00 32 (0)3 778.09.52
weynlauwers@weynlauwers.be
www.weynlauwers.be

FOOT VALVE BRASS FIG 791

DESIGN FEATURES

- brass foot valve
- max. temp : 0˚C +90˚C
- specifications :
  acc. UNE-EN 12165
  thread end gas female cylindric BSP

- also available in brass with NPT thread end (fig 791NPT)

MATERIALS

item	Part name	Material
1	body	Brass CW617N
2	obturator	Brass CW617N
3	seal joint	NBR
4	union joint	Fiber
5	filter	brass UNI 5035

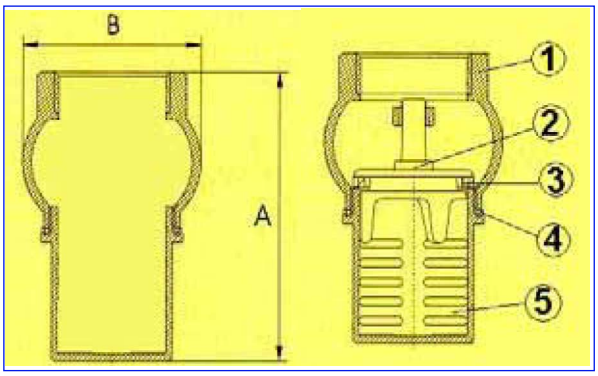

SIZE (in mm)

DN	1/2”	3/4”	1”	1 1/4”	1 1/2”	2”	2 1/2”	3”	4”		
PN	10	10	10	8	8	8	6	6	6		
A		70	82	94	102	119	139	175	194		
B		45	51	61	68	80	100	121	145		
kg		0,23	0,31	0,49	0,58	0,95	1,37	1,74	3,14		
ref.	205361	205362	205363	205364	205365	205366	205367	205368	205369		